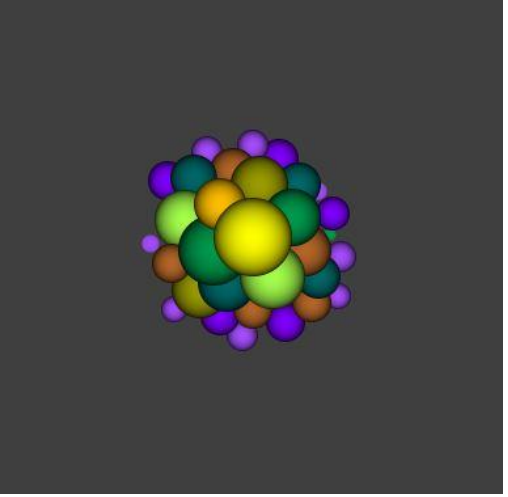

CS 440: Computer Graphics

Week 2

Lecture 3: Imaging

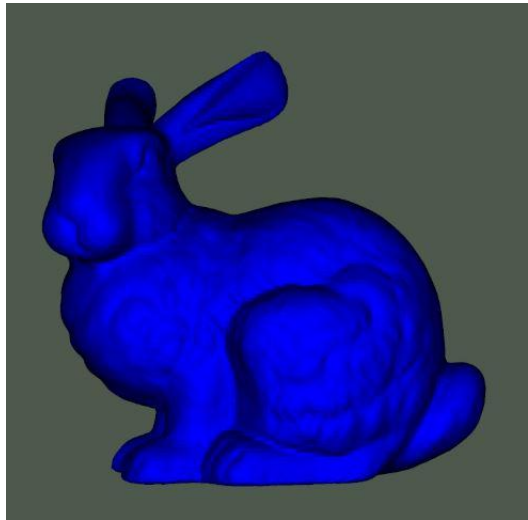

Acknowledgements: Cem Yuksel, University of Utah; Waqar Saleem, Habib University

Announcements and Recap

- Assignment 1 released
  - Discussion thread

- Recap: Introduction and Brief Overview of Graphics Systems
  - Points
  - Vectors and its operations
  - Matrices and its operations

Today: Imaging

- Systems View
- Programmer's View
- Images and Pixels
- Image Formats
- Color
- Imaging System: Human Visual System
- Image Formation
- Imaging System: Pinhole Camera
- Imaging System: Synthetic Camera Model

Systems View

- Input Devices

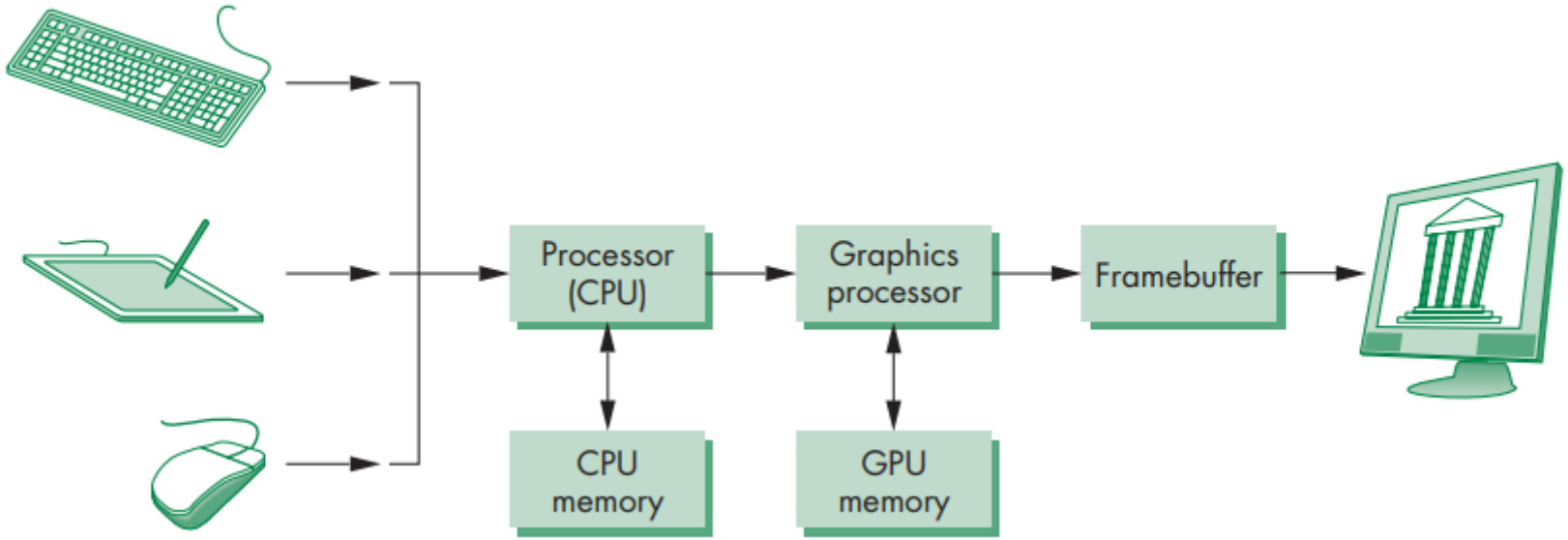

Systems View

- CPU and Memory
  - Calculations, such as where an object is in a scene
  - Offloads most of graphical work to GPU

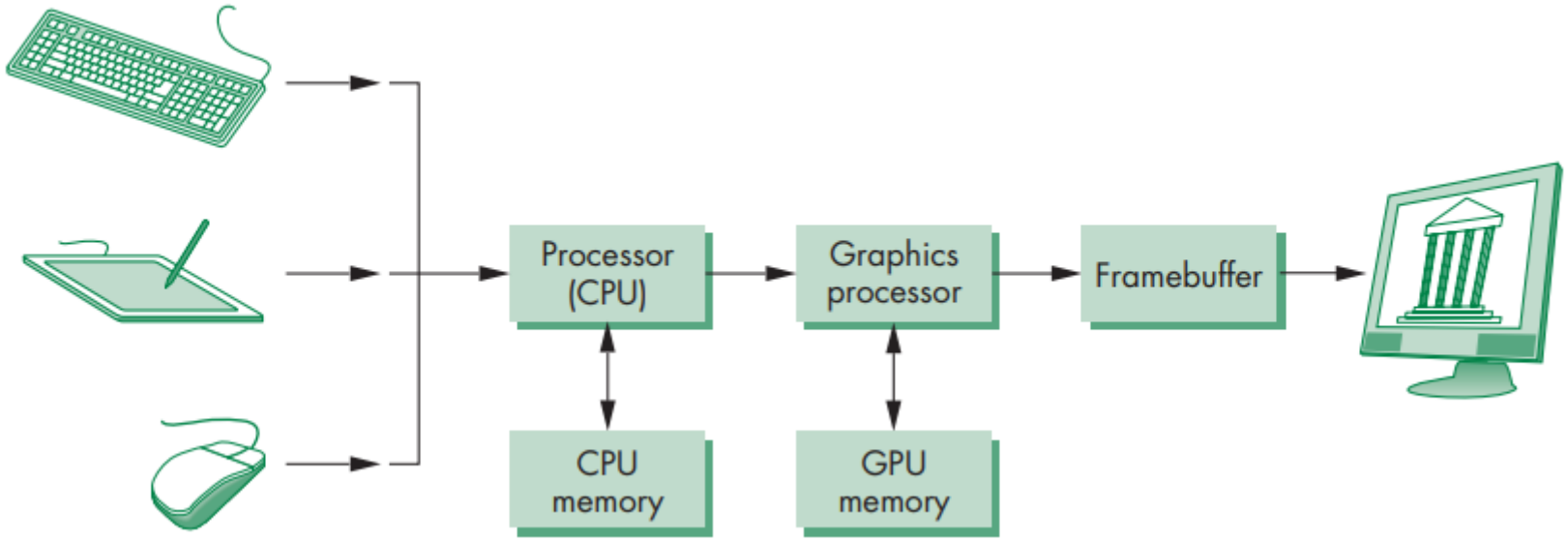

Systems View

- GPU and Memory
  - Highly parallelized, uses graphics APIs
  - Scene rendering

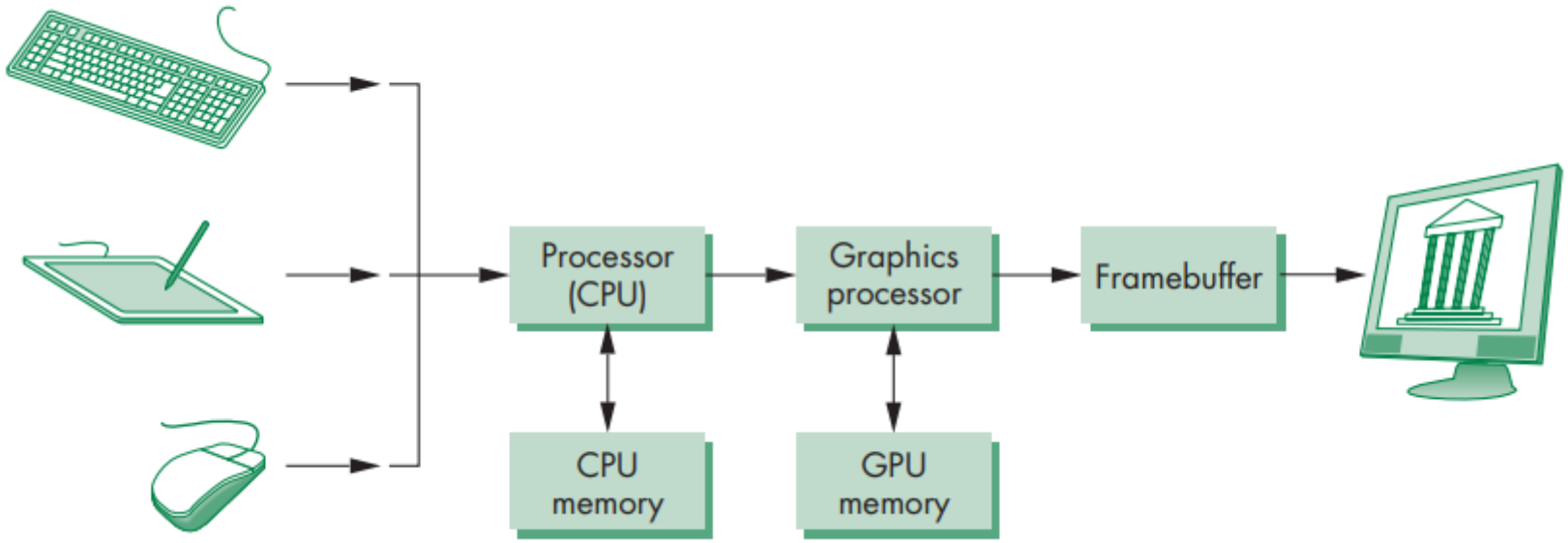

Systems View

- Framebuffer
  - Large block of memory
  - Depth/Precision: display information in bits
- Framebuffer Resolution
- Refresh rate

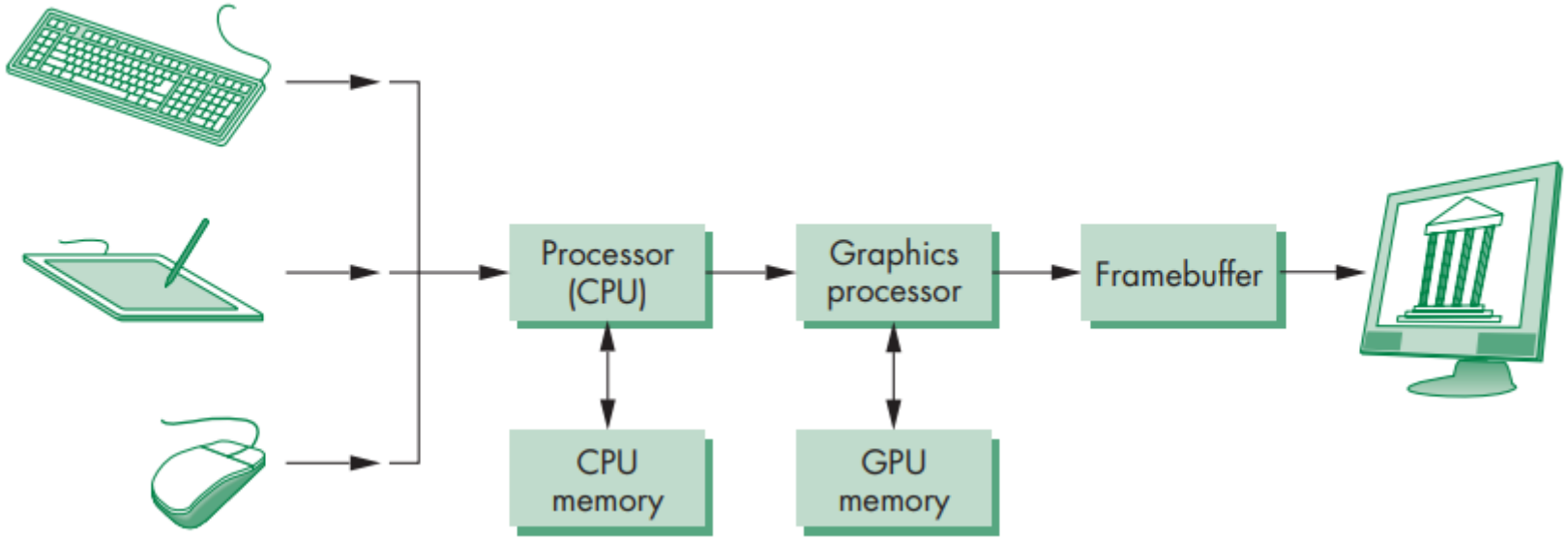

Color Representation

- Pixels are stored in framebuffer
- LDR Storage: 8 bits / color channel (0 to 255)
- HDR Storage: 10 or 12 bits/color channel

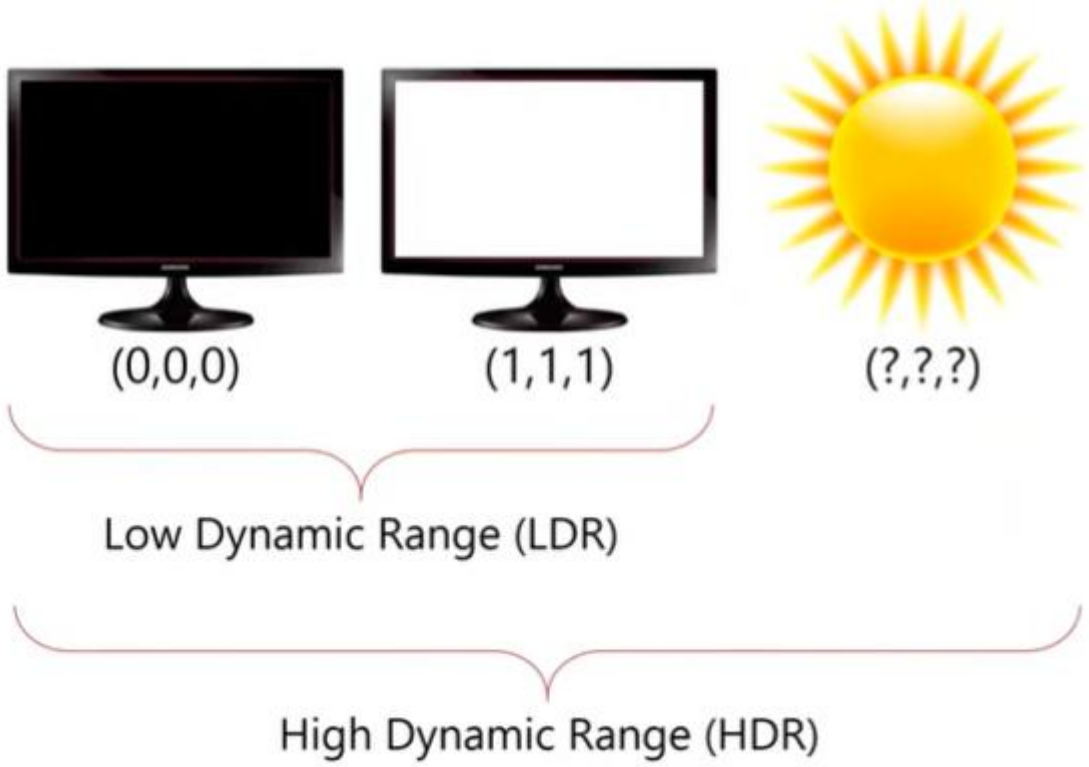

Systems View

- Display Device

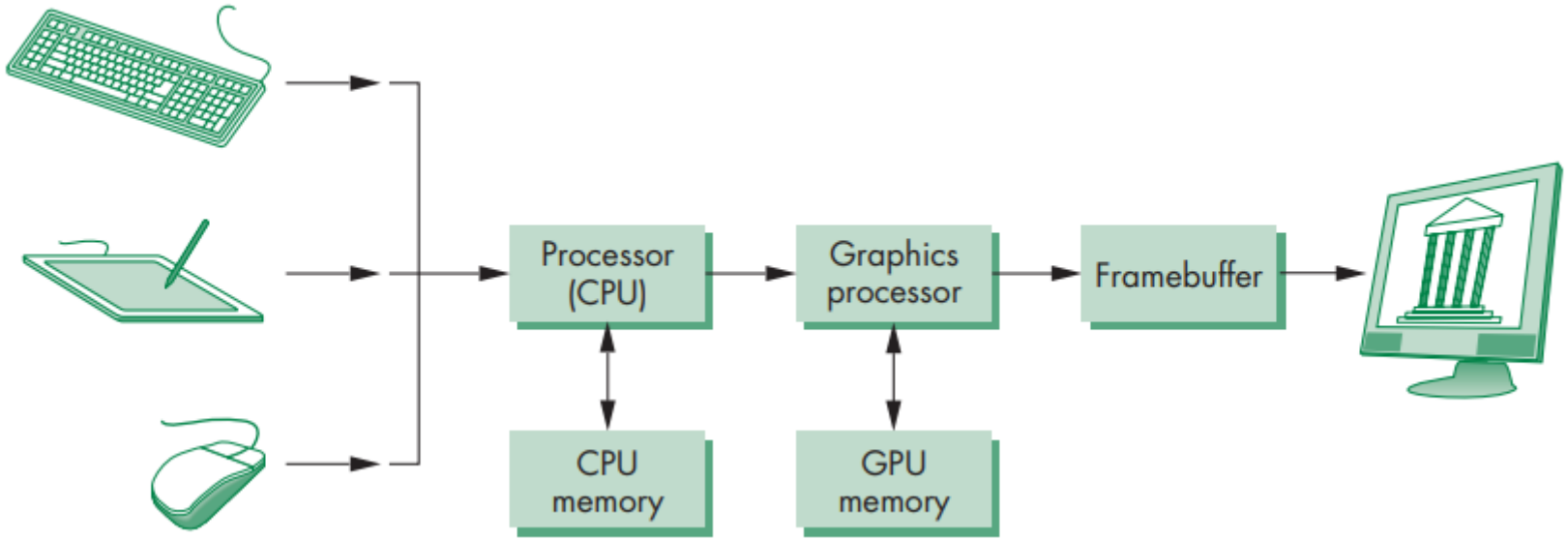

Raster Images in Memory

- Noninterlaced vs interlaced systems

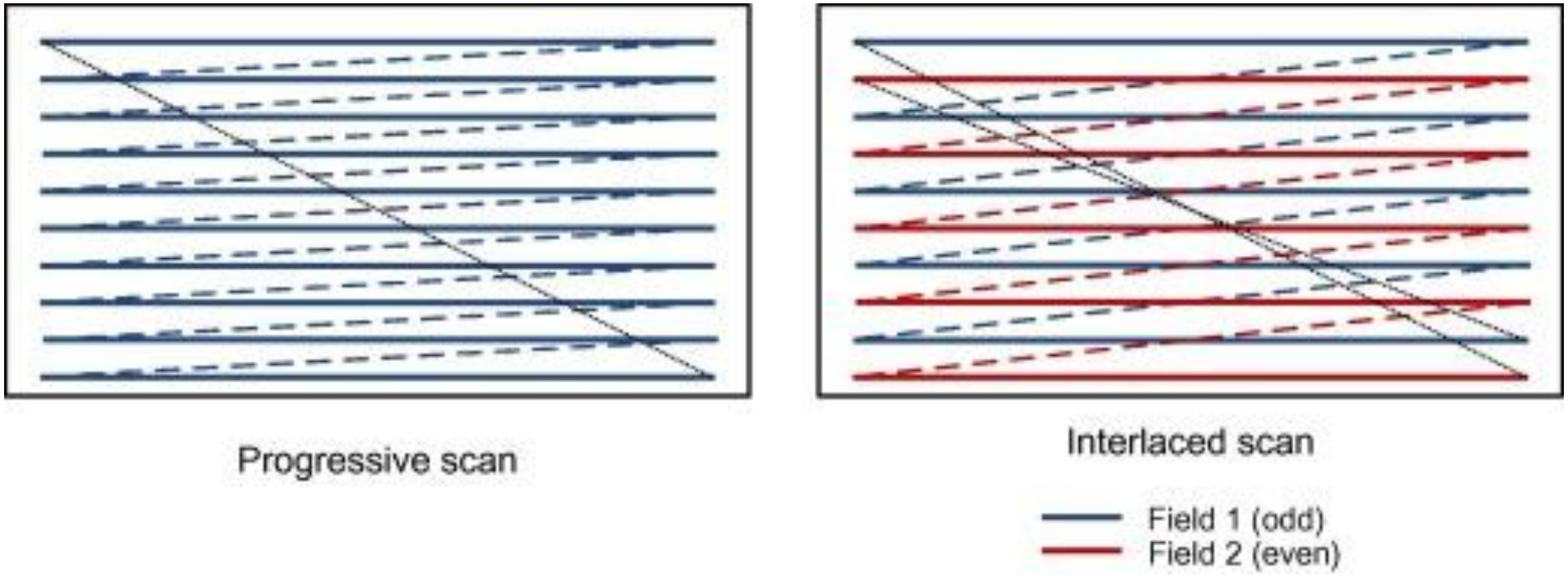

Programmer's View

- Application program is high level
- Independent of I/O details
- Lower level details are handled by the graphics system

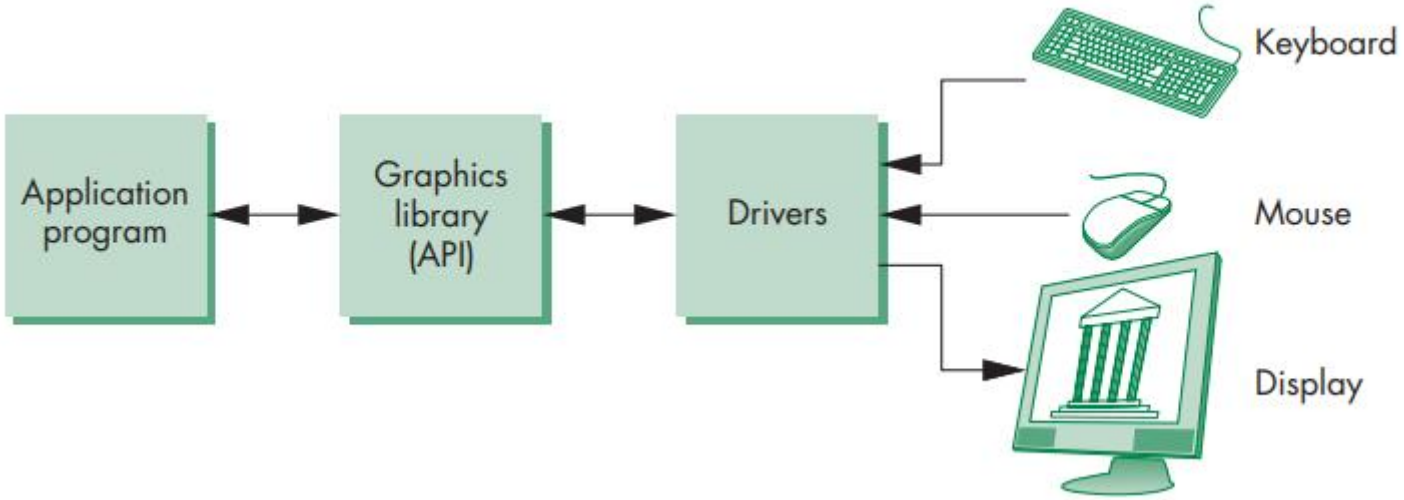

Images and Pixels

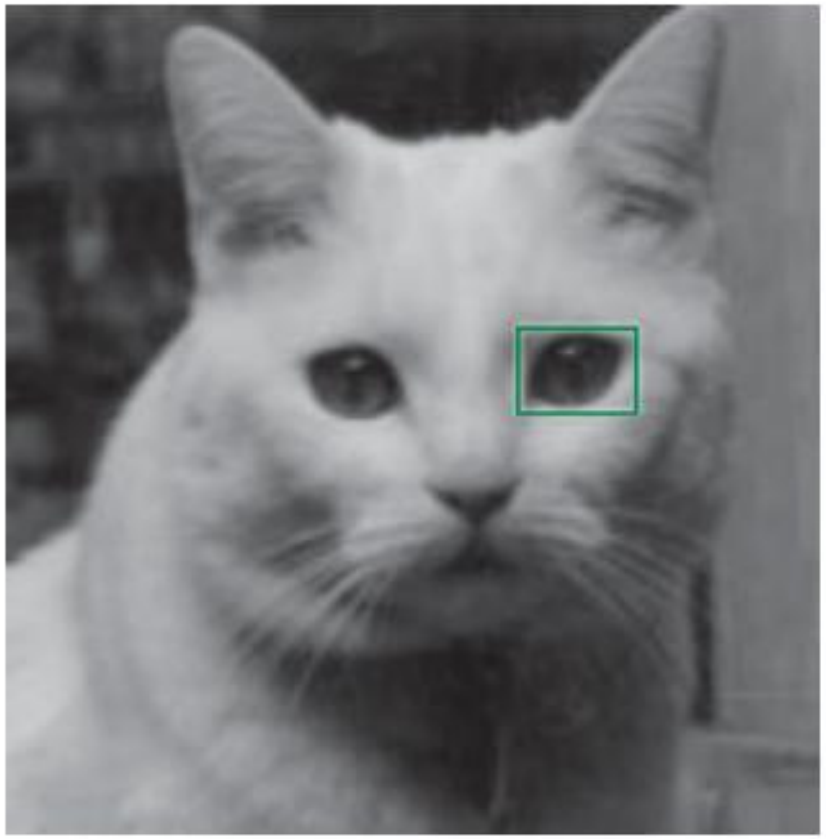

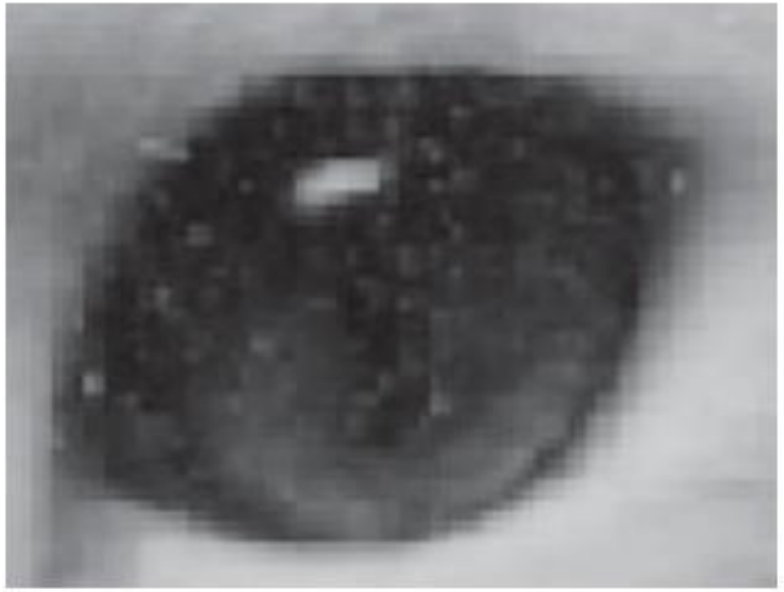

Pixels

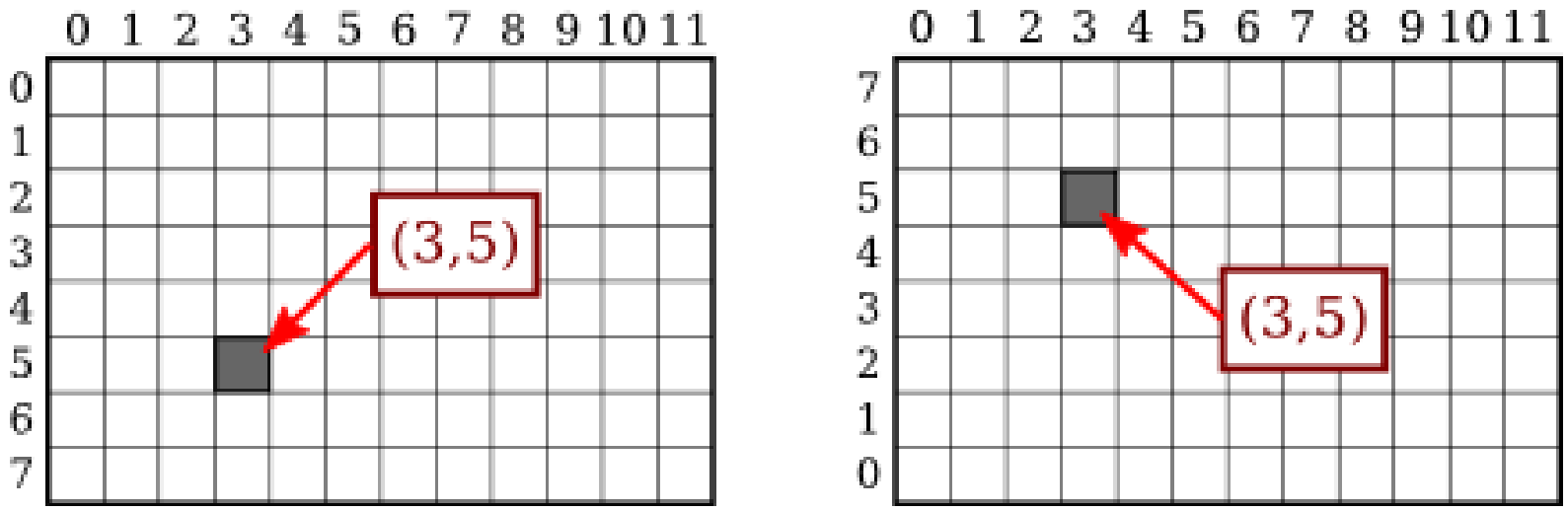

12-by-8 pixel grids, shown with row and column numbers.
On the left, rows are numbered from top to bottom,
on the right, they are numberd bottom to top.

Raster vs Vector Images

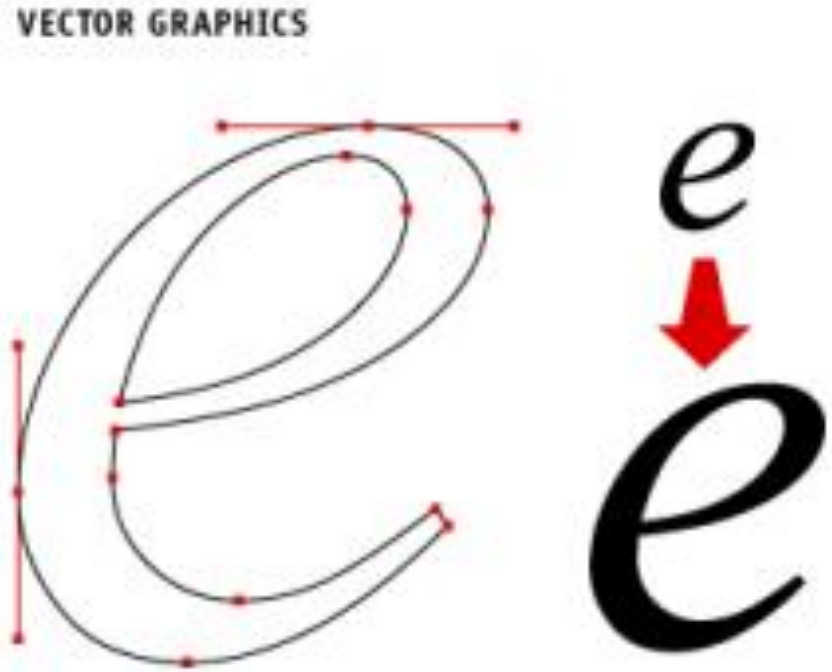

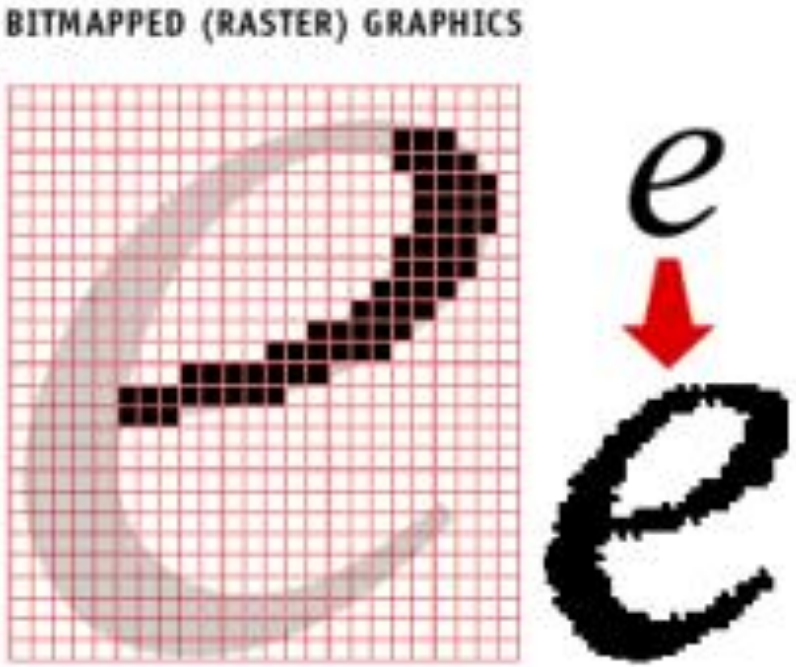

Raster vs Vector Images

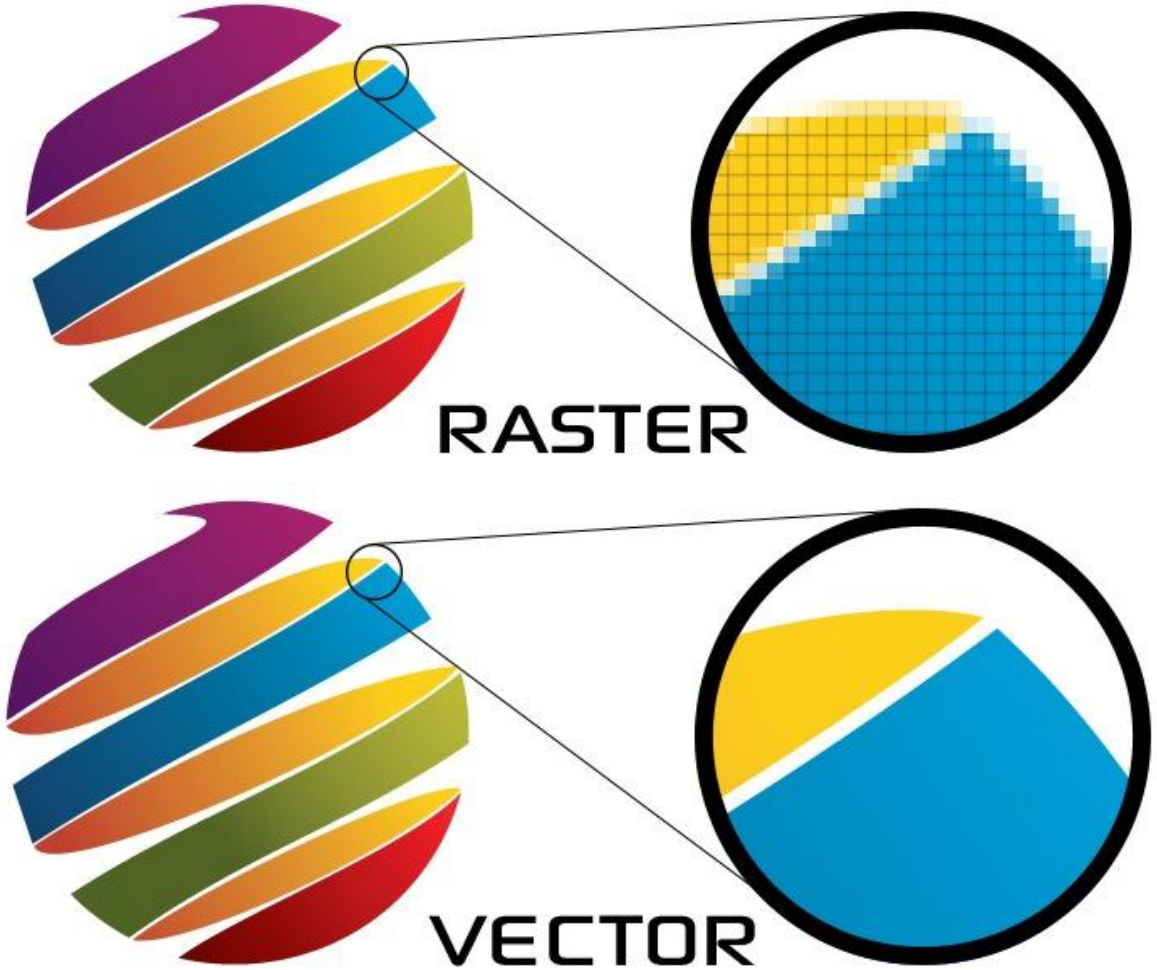

Image Formats

- BMP: Bitmap Image File
- PPM: Portable Pixmap Image File
  - Uncompressed
  - Directly stores RGB values (LDR)
  - Large file size
  - 1/8/16 bits per channel

Image Formats

- PNG: Portable Graphics Format
  - Lossless compression
  - LDR
  - 8/16 bits per channel
- GIF: Graphics Interchange Format
  - Lossless compression
  - LDR
- JPEG: Joint Photographic Experts Group
  - Lossy compression
  - 8 bits per channel

Image Formats

TOP 4 IMAGE FORMATS FOR THE WEB [2018]

	JPG	GIF	PNG	SVG
VECTOR				✓
RASTER	✓	✓	✓	
TRANSPARENCY			✓	✓
ANIMATION		✓	✓	✓
LOSSY	✓			

How are Raster Images formed?

- Rasterization-based Pipeline
  - Geometric primitives undergo transformations
  - Objects are converted to their “raster” representation
  - Color is pre-determined
- Ray Tracing
  - Simulating the process of light interaction with objects in the real world
  - Color we see depends on the light sources and materials

Color

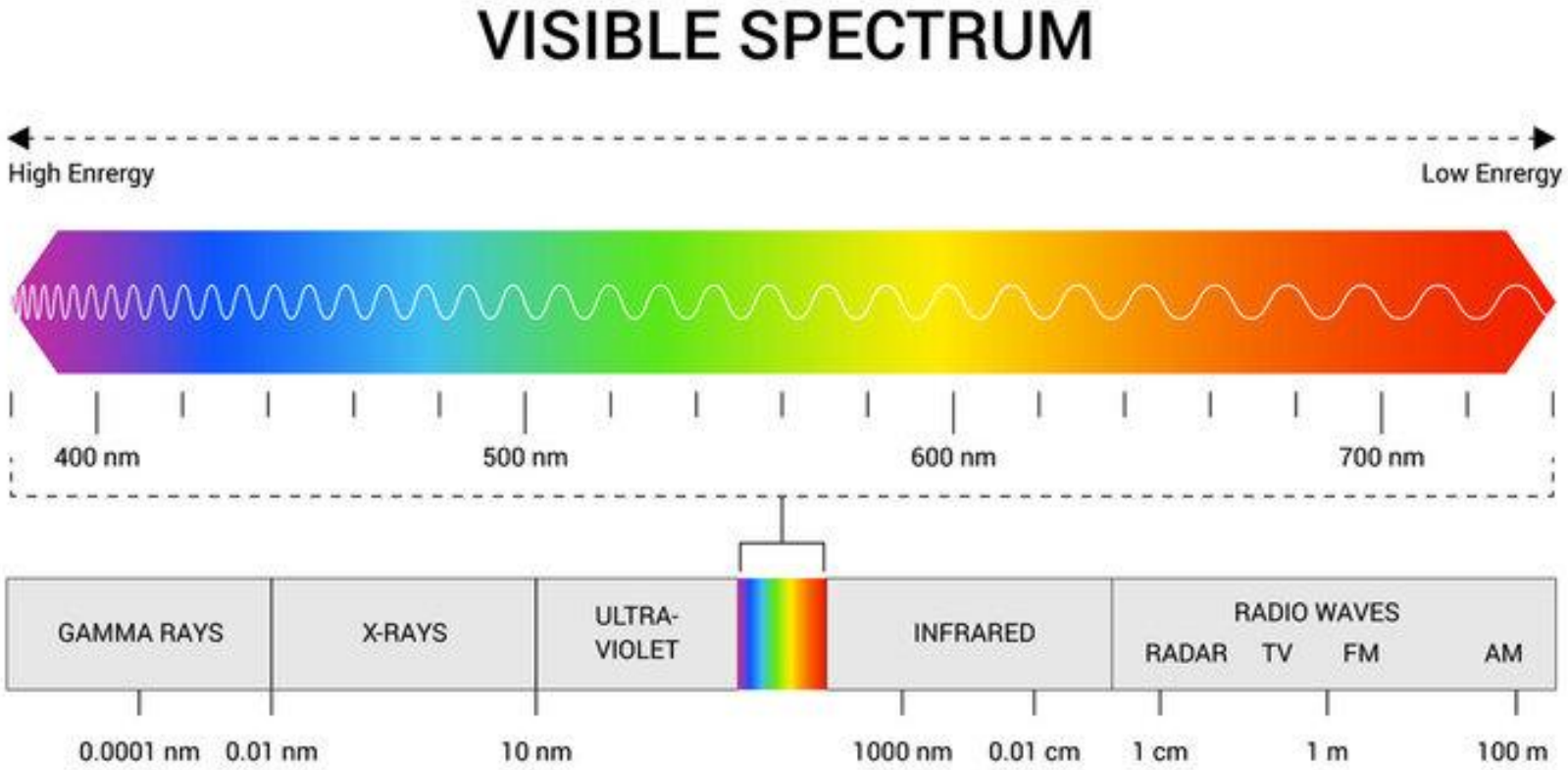
VISIBLE SPECTRUM
High Enrergy
Low Enrergy
400 nm
500 nm
600 nm
700 nm
GAMMA RAYS
X-RAYS
ULTRA-
VIOLET
INFRARED
RADIO WAVES
RADAR
TV
FM
AM
0.0001 nm
0.01 nm
10 nm
1000 nm
0.01 cm
1 cm
1 m
100 m

Imaging Systems: Human Visual System

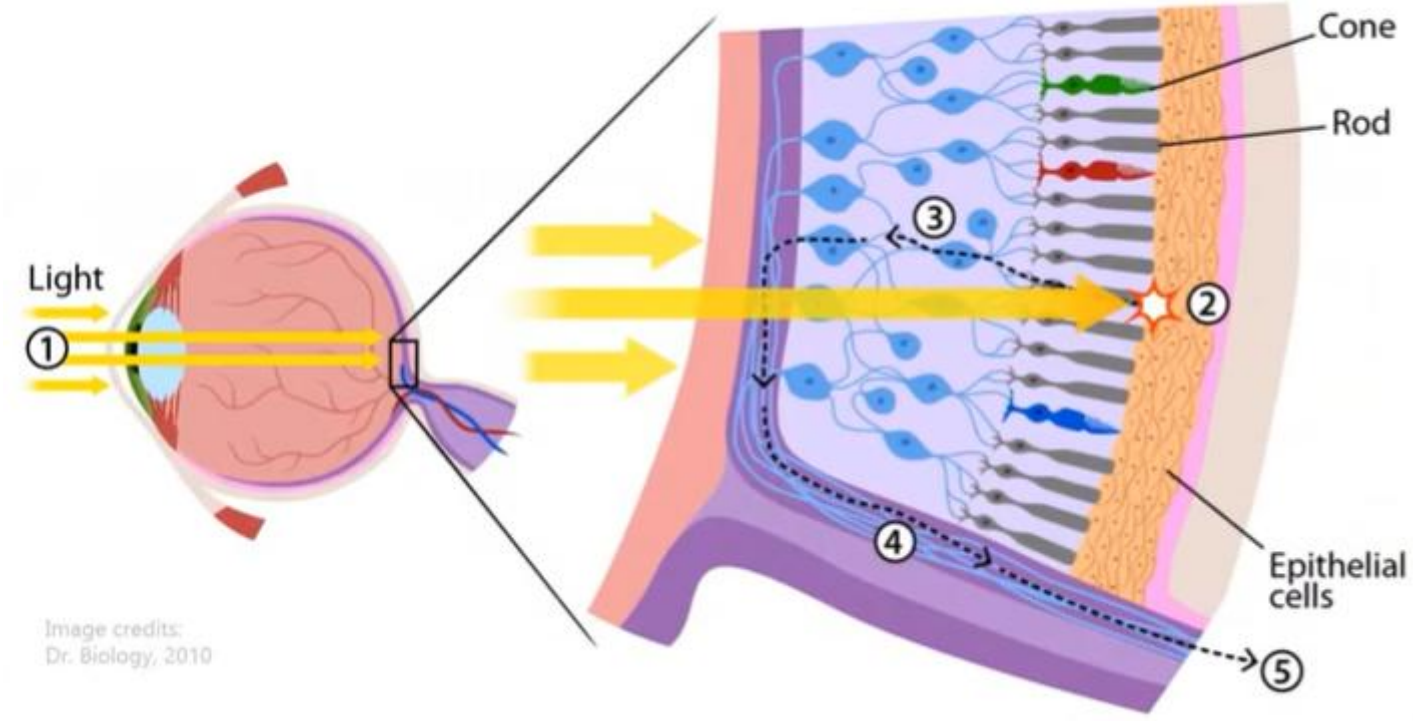

Imaging Systems: Human Visual System

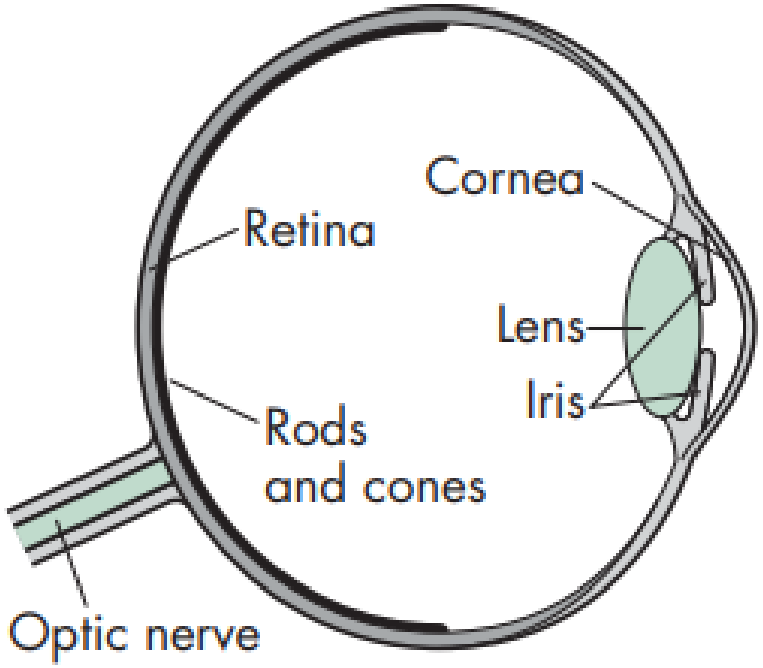

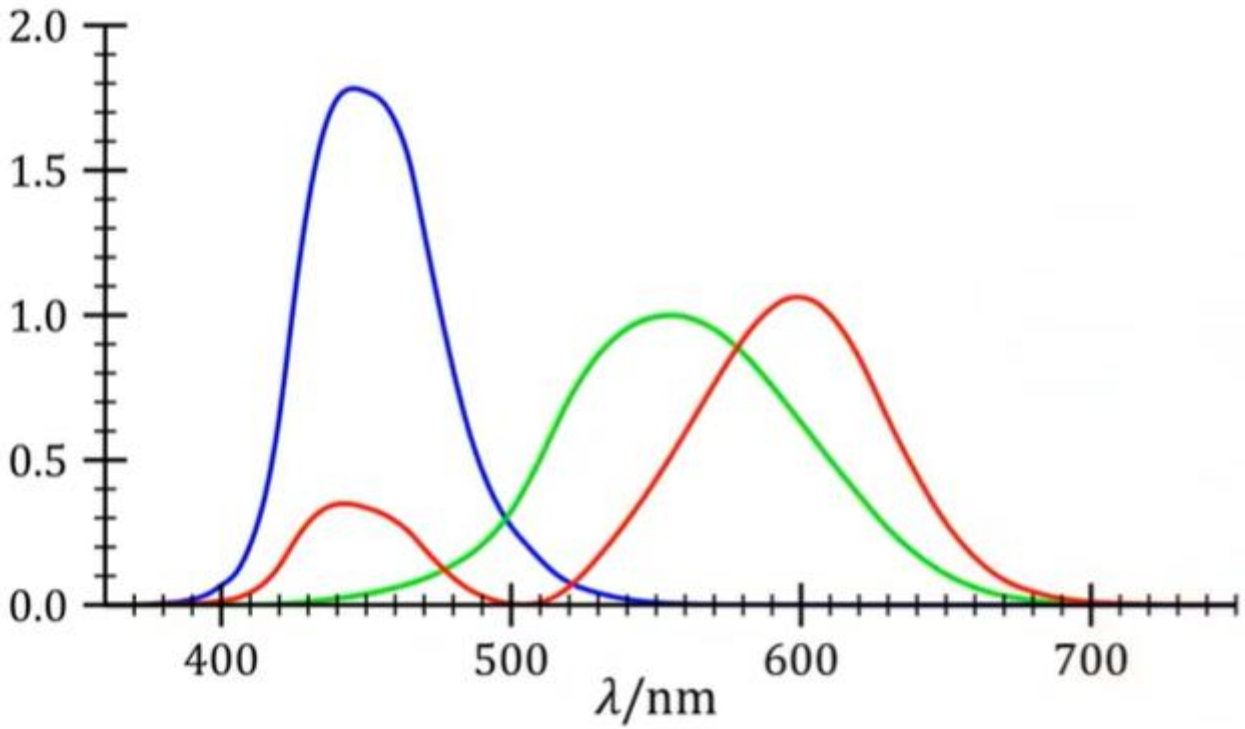

Color

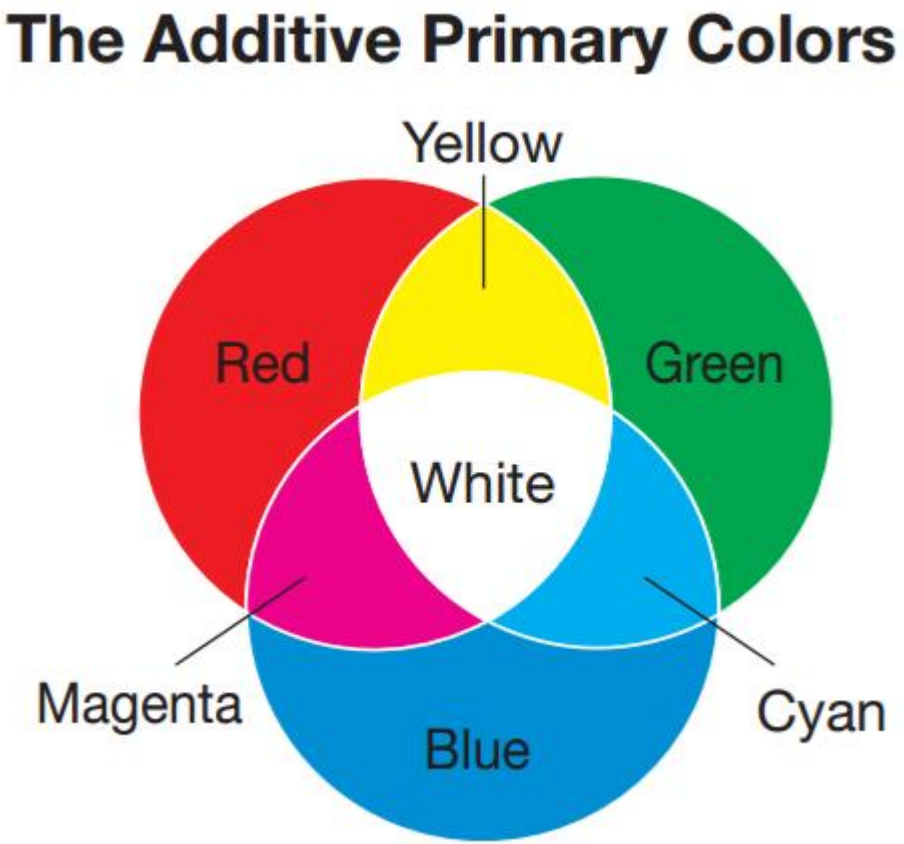
The Additive Primary Colors
Yellow
Red
Green
White
Magenta
Blue
Cyan

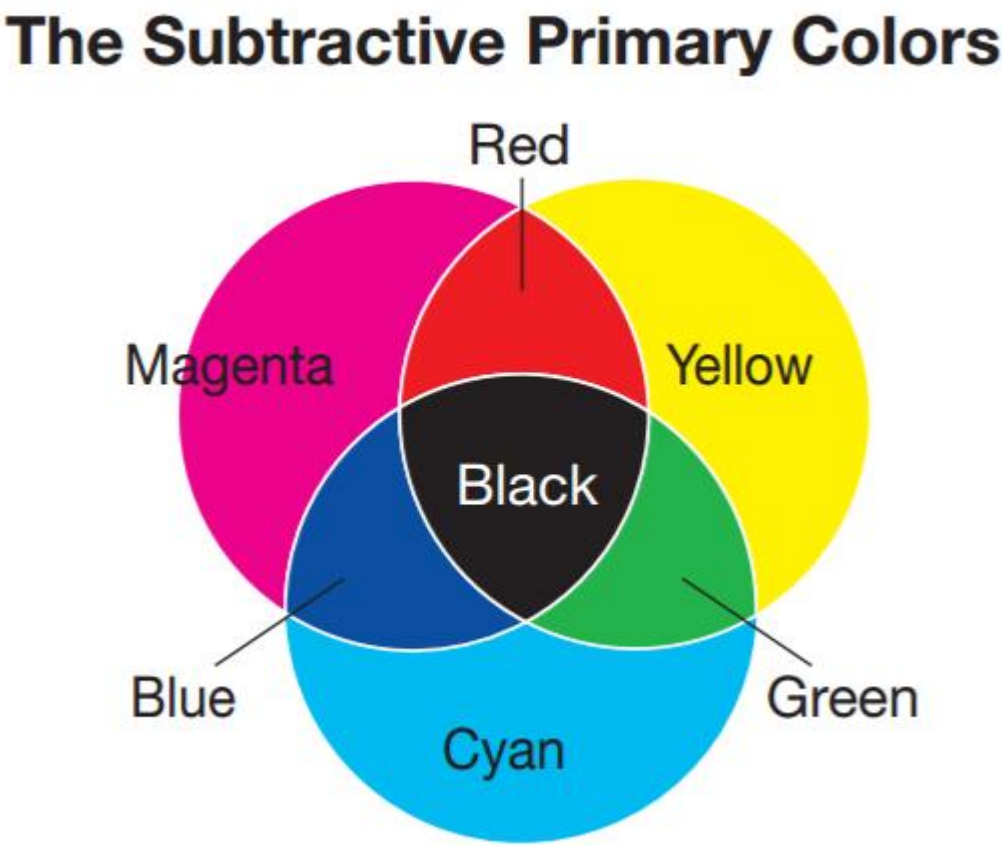
The Subtractive Primary Colors
Red
Magenta
Yellow
Black
Blue
Green
Cyan

Color Cube
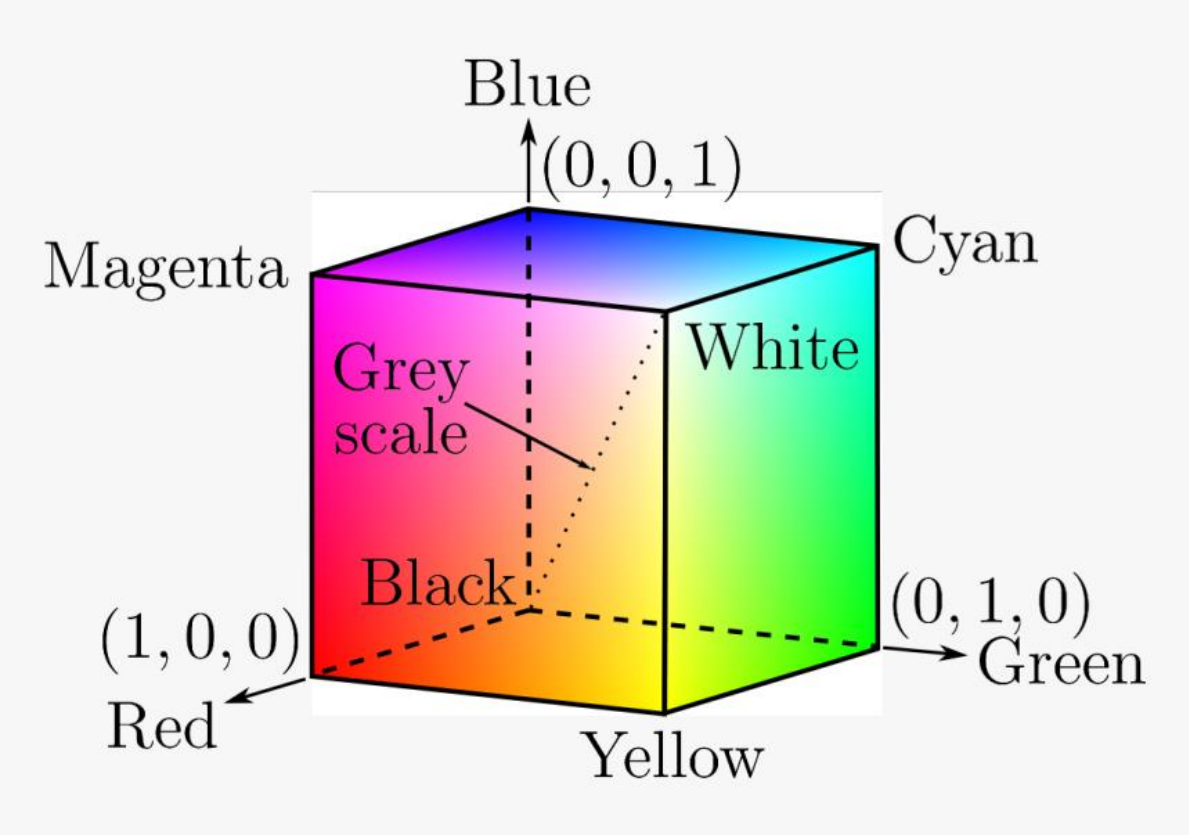
- RGB values in [0, 1]
- Similar to a coordinate system